Solenne 250/155



Solenne is designed by Kauppi & Kauppi and includes a total of seven lighting fixtures, all with generous matt opal glass shades and black or white glazed porcelain bases. Four of the fixtures follow our traditional range for ceiling, wall, and facade with IP44 ratings suitable for both indoor and outdoor installations. The collection also includes three more novel types of lighting fixtures, taking our pressed porcelain to new indoor contexts. Solenne includes a grand pendant with a corresponding porcelain ceiling cup, a new table luminaire with a wooden base, and Ifö Electric's very first floor lamp.

EAN / GTIN	7312908441506
E-number	7509642
Article no.	8441-500-10
Type designation	51765/E27S

Specification

Base colour	White (NCS S 1000-N)
Glass	Matt opalglas
Glass thread (mm)	123,5 mm
Glass gasket	Silicone
Weight	1,9 kg
Diameter (mm)	250
Height (mm)	156
Lamp holder	E27
Light source	E27, max 40W (not incl.)
Rated voltage	230V
IP class	IP44
Insulation class	II
D class	No
IK class	IK02
Ta	-30 - +25
Installation	Ceiling/wall
CC measurement (mm)	60-66, 70
Knock out opening	4
Cable inlet	Bottom inlet
Cable glands	Bottom inlet
Bridging	Yes
Surface mounted cable	Yes
Connection	Screw connector
Family	Solenne
Design	Kauppi & Kauppi

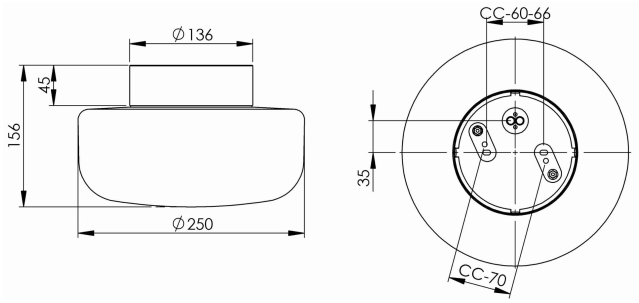

Maintenance

Disconnect the luminiarie. Remove the shade and clean it. Do not use cleaning agents containing solvents. Change the light source if necessary. Check the gasket and change it if necessary. Replace the shade.

Spare parts

Shade Solenne 250, Article no.: 1-6164-30
Gasket silicone for thread 123,5 mm, Article no.: 02789

If the luminaire is modified the person responsible for the modification shall be considered manufacturer. Subject to errors in text. We reserve the right to change the technical specifications (without notice).