Solenne 210/165

Solenne is designed by Kauppi & Kauppi and includes a total of seven lighting fixtures, all with generous matt opal glass shades and black or white glazed porcelain bases. Four of the fixtures follow our traditional range for ceiling, wall, and facade with IP44 ratings suitable for both indoor and outdoor installations. The collection also includes three more novel types of lighting fixtures, taking our pressed porcelain to new indoor contexts. Solenne includes a grand pendant with a corresponding porcelain ceiling cup, a new table luminaire with a wooden base, and Ifö Electric's very first floor lamp.

EAN / GTIN	7312908440165
E-number	7509641
Article no.	8440-500-16
Type designation	52760

Specification

Base colour	Black (NCS S 9000-N)
Glass	Matt opalglas
Glass thread (mm)	99 mm
Glass gasket	Silicone
Diameter (mm)	210
Height (mm)	165
Lamp holder	E27
Light source	E27, max 40W (not incl.)
Lighting control	E27, max 40W (not incl.)
Rated voltage	230V
IP class	IP54
Insulation class	II
D class	No
IK class	IK02
Ta	-30 - +25
Installation	Ceiling/wall
CC measurement (mm)	60-66, 70
Knock out opening	0
Cable inlet	Bottom inlet
Cable glands	Bottom inlet
Bridging	Yes
Surface mounted cable	No
Connection	Mantle screw
Family	Solenne
Design	Kauppi & Kauppi

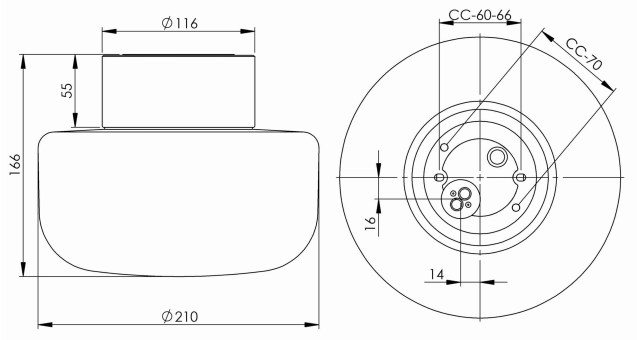

Maintenance

Disconnect the luminiarie. Remove the shade and clean it. Do not use cleaning agents containing solvents. Change the light source if necessary. Check the gasket and change it if necessary. Replace the shade.

Spare parts

Shade Solenne 210, Article no.: 1-6163-30
Gasket silicone for thread 99 mm, Article no.: 03542

If the luminaire is modified the person responsible for the modification shall be considered manufacturer. Subject to errors in text. We reserve the right to change the technical specifications (without notice).

Ifö Electric AB. Box 116, 295 22 Bromölla, Sweden. Tel: +46 456 265 00 E-mail: info@ifoelectric.com Website: www.ifoelectric.com