Ohm 140/170 LED DALI 3000K



A family of porcelain luminaires for walls, ceilings and tables. Designed by Kauppi & Kauppi, the soft curves and restrained silhouette references to both Scandinavian design and ancient Japanese tableware.

EAN / GTIN	7312908352901
E-number	7508458
Article no.	8352-8001-10
Type designation	51822/DALI

Specification

Material	Porcelain
Base colour	White (NCS S 1000-N)
Glass	Matt opal glass
Glass thread (mm)	123,5 mm
Glass gasket	Silicone
Weight	1,61 kg
Diameter (mm)	138
Height (mm)	167
Lamp holder	LED
Light source	LED module 10W
Effect	10W
Lumen, light source	1200lm
Colour temperature	3000K
MacAdam	3 SDCM
Life span	L80/B10: 50 000 h
Ra	Min 90
Lighting control	DALI Type 2
Rated voltage	230V
Dimmable	DALI PHM126 min 3%
IP class	IP44
Insulation class	I
Energy class	E
D class	No
IK class	IK02
Ta	-30 - +25
Installation	Ceiling/wall
CC measurement (mm)	60-66, 70
Knock out opening	0
Cable inlet	Bottom inlet
Cable glands	Bottom inlet
Cable area, max	Max 5 x 2,5 mm2
Bridging	Yes
Surface mounted cable	No
Connection	Terminal block
Family	Ohm
Design	Kauupi & Kauppi

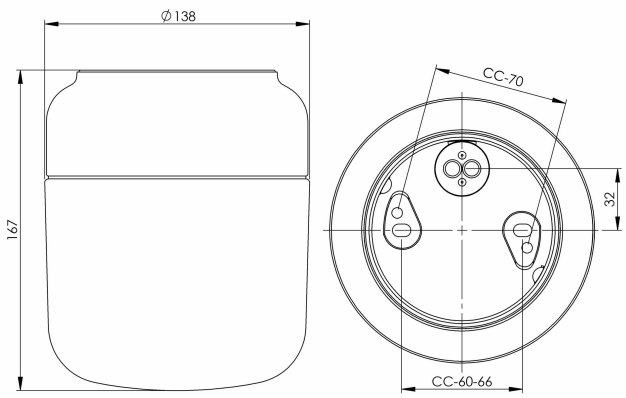

Maintenance

Disconnect the power to the luminaire. Unscrew the glass and clean it. Do not use detergents that contain solvents. Replace light source if necessary. Check the gasket and replace it if necessary. Screw the shade back on.

Spare parts

Shade Ohm 140/170 matt opal, Article no.: 1-6168-30
Gasket silicone for thread 123,5 mm, Article no.: 02789
LED module 10W DALI 3000K, Article no.: 1-54062-1930

If the luminaire is modified the person responsible for the modification shall be considered manufacturer. Subject to errors in text. We reserve the right to change the technical specifications (without notice).

Ifö Electric AB. Box 116, 295 22 Bromölla, Sweden. Tel: +46 456 265 00 E-mail: info@ifoelectric.com Website: www.ifoelectric.com