Contrast Fridhem LED 3000K

Contrast is a series with different shades in matt opal glass. Each type of glass has received its own local name to honour the area. Ifö Contrast is suitable for both private and public settings.

EAN / GTIN	7312908033824
E-number	7502770
Article no.	8033-800-12
Type designation	52721-2/LED



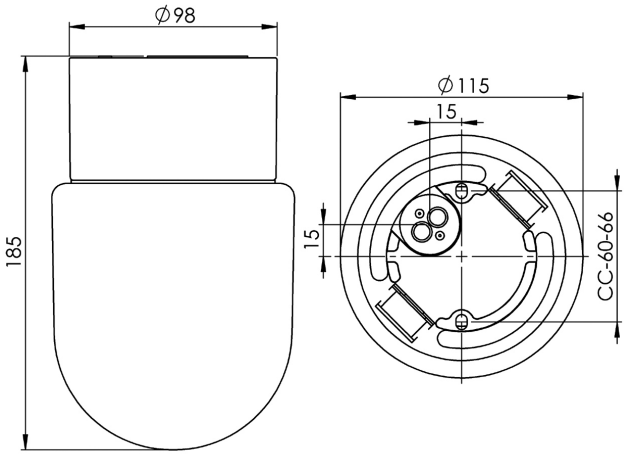

Specification

Material	Porcelain
Base colour	Grey (NCS S 6005-G50Y)
Glass	Matt opal glass
Glass thread (mm)	84,5 mm
Glass gasket	Silicone
Weight	0,85 kg
Diameter (mm)	115
Height (mm)	185
Lamp holder	LED
Light source	LED module, 8W
Effect	8W
Lumen, light source	800lm
Lumen, luminarire	622
Colour temperature	3000K
MacAdam	3
Life span	L80/B10: 50 000 h
Ra	Min 90
Rated voltage	230V
Dimmable	Back edge only - We recommend dimmers from ION, Schneider, Vadsbo and Niko
IP class	IP54
Insulation class	I
Energy class	F
D class	Yes
IK class	IK02
Ta	-30 - +25
Installation	Ceiling/wall
CC measurement (mm)	60-66
Knock out opening	2 - demands glands
Cable inlet	Bottom inlet
Cable glands	Bottom inlet
Cable area, max	Max 3 x 2,5 mm2
Bridging	Yes
Surface mounted cable	Yes
Connection	Terminal block
Family	Contrast
Design	Duoform

Luminaire specific information

Approved for use in environments where an accumulation of non-conductive dust on the luminaire can be expected.

Maintenance

Disconnect the power to the luminaire. Unscrew the glass and clean it. Do not use detergents that contain solvents. Replace light source if necessary. Check the gasket and replace it if necessary. Screw the shade back on.

Spare parts

Shade Fridhem matt opal, Article no.: 1-6122
Gasket silicone for thread 84,5 mm, Article no.: 02786-9
LED module 8W - 3000K, Article no.: 1-54057-930

If the luminaire is modified the person responsible for the modification shall be considered manufacturer. Subject to errors in text. We reserve the right to change the technical specifications (without notice).