# Bernadotte Double IP20



It is said that good design is timeless. Designed by Sigvard Bernadotte in the middle of the 1960's - 50 years later, it is still as popular.

| | |
|---|---|
| EAN / GTIN | 7312906060167 |
| E-number | 7530830 |
| Article no. | 6060-704-16 |
| Type designation | 6060-2 |
| Norwegian El-number | 3032207 |
| Finnish S-number | 4212330 |

CE

**Specification**

| | |
|---|---|
| Material | Porcelain |
| Base colour | Black (NCS S 9000-N) |
| Glass | Shiny opal glass |
| Glass thread (mm) | 57 mm |
| Glass gasket | Silicone |
| Weight | 0,8 kg |
| Length/Depth (mm) | 100 |
| Width (mm) | 79 |
| Height (mm) | 297 |
| Lamp holder | E14 |
| Light source | 2 x max 40W (not included) |
| Effect | 2 x max 40W |
| Rated voltage | 230V |
| IP class | IP20 |
| Insulation class | II |
| D class | No |
| IK class | IK02 |
| Ta | -30 - +25 |
| Installation | Wall |
| CC measurement (mm) | 81 |
| Knock out opening | 2 |
| Cable inlet | Bottom inlet |
| Cable glands | Bottom inlet |
| Cable area, max | Max 2 x 4 mm2 |
| Bridging | Yes |
| Surface mounted cable | Yes |
| Connection | Terminal block |
| Family | Bernadotte |
| Design | Sigvard Bernadotte |

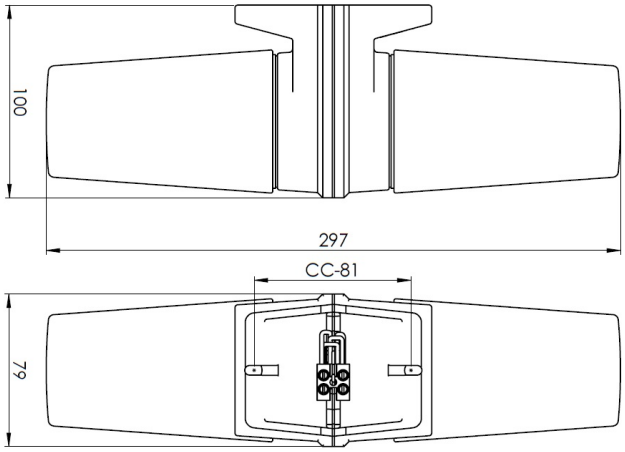


**Maintenance**

Disconnect the power to the luminaire. Unscrew the glass and clean it. Do not use detergents that contain solvents. Replace light source if necessary. Check the gasket and replace it if necessary. Screw the shade back on.

**Spare parts**

Shade Bernadotte E14 shiny opal, Article no.: 1-6109
Gasket silicone for thread 57 mm for Bernadotte, Article no.: 03390

*If the luminaire is modified the person responsible for the modification shall be considered manufacturer. Subject to errors in text. We reserve the right to change the technical specifications (without notice).*