Classic Globe 300 LED DALI 3000K



The Classic series is an old favourite of our assortment. Ideal in most areas where functionality and timeless design are the key words. Classic is available in different combinations and are also available with a grey or a brown glazed base as option.

EAN / GTIN	7312904095925
E-number	7508449
Article no.	4095-8001-16
Type designation	8262/DALI

Specification

Material	Porcelain
Base colour	Black (NCS S 9000-N)
Glass	Matt opal glass
Glass thread (mm)	185,5 mm
Glass gasket	Silicone
Weight	3,04 kg
Diameter (mm)	300
Height (mm)	305
Lamp holder	LED
Light source	LED module 12W
Effect	12W
Lumen, light source	1350lm
Colour temperature	3000K
MacAdam	3 SDCM
Life span	L80/B10: 50 000 h
Ra	Min 90
Lighting control	DALI Type 2
Rated voltage	230V
Dimmable	DALI PHM126 min 3%
IP class	IP44
Insulation class	II
Energy class	E
D class	No
IK class	IK02
Ta	-30 - +25
Installation	Ceiling/wall
CC measurement (mm)	133, 70
Knock out opening	3
Cable inlet	Bottom inlet
Cable glands	Bottom inlet
Cable area, max	Max 5 x 2,5 mm2
Bridging	Yes
Surface mounted cable	Yes
Connection	Terminal block
Family	Classic Globe
Design	Håkan Svennesson

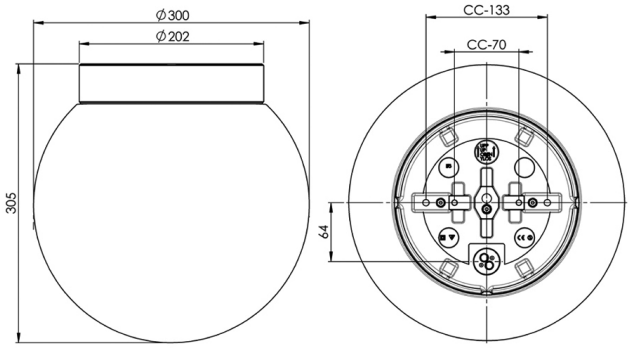

Maintenance

Disconnect the power to the luminaire. Unscrew the glass and clean it. Do not use detergents that contain solvents. Replace LED module if necessary. Check the gasket and replace it if necessary. Screw the shade back on.

Spare parts

Shade globe Ø 300 mm matt opal, Article no.: 1-6140-1
Gasket silicone for thread 185,5 mm, Article no.: 03431
LED module 12W DALI 3000K, Article no.: 1-54064-1930

If the luminaire is modified the person responsible for the modification shall be considered manufacturer. Subject to errors in text. We reserve the right to change the technical specifications (without notice).